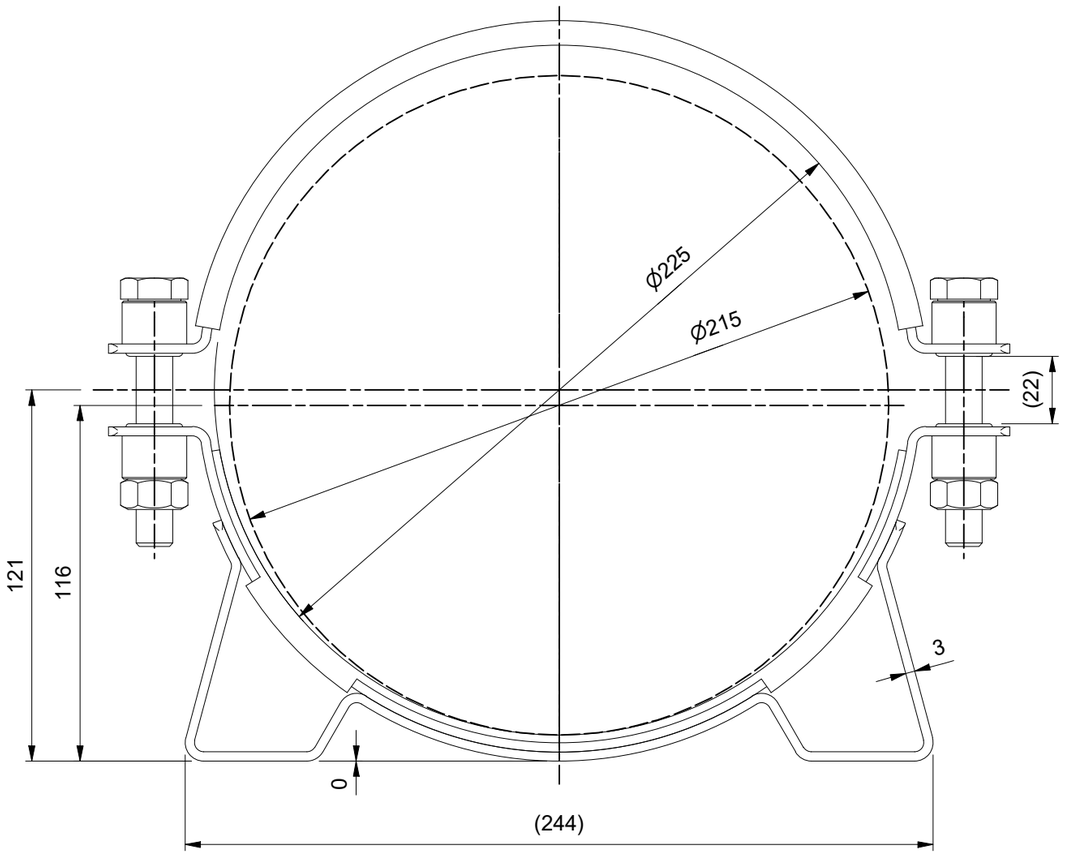

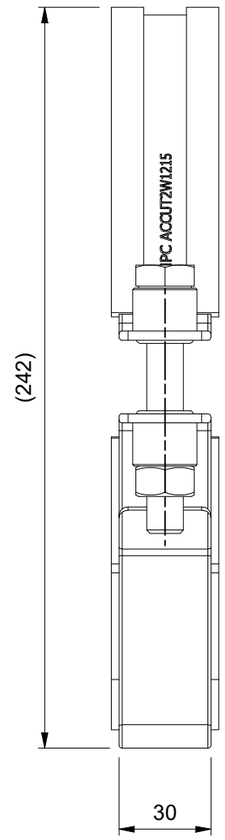

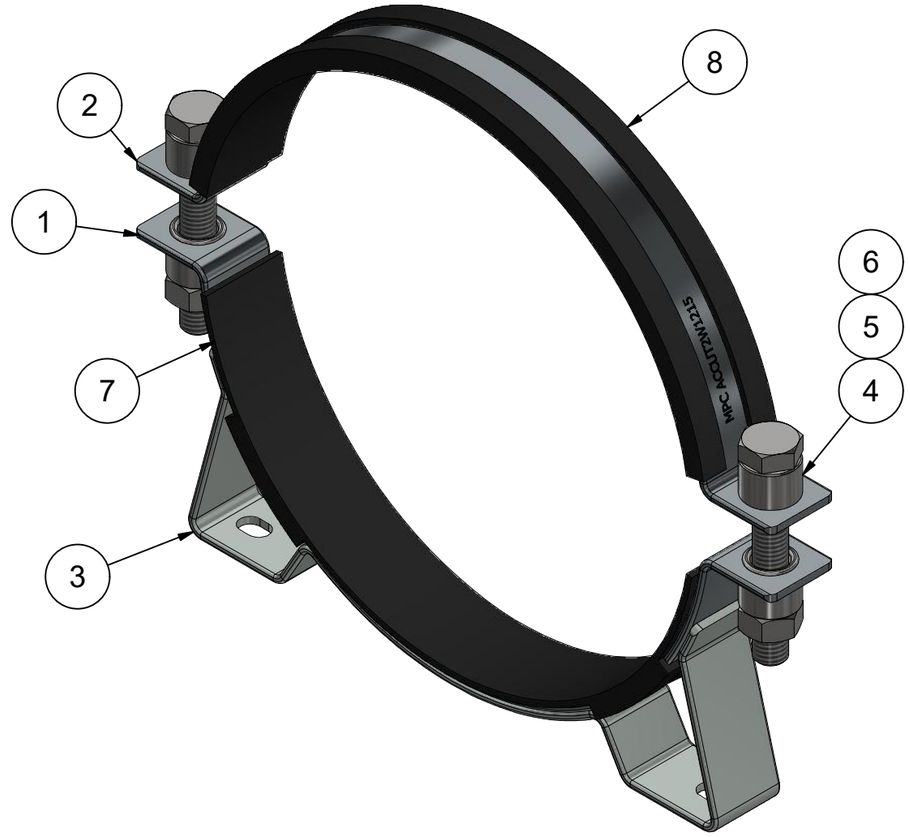

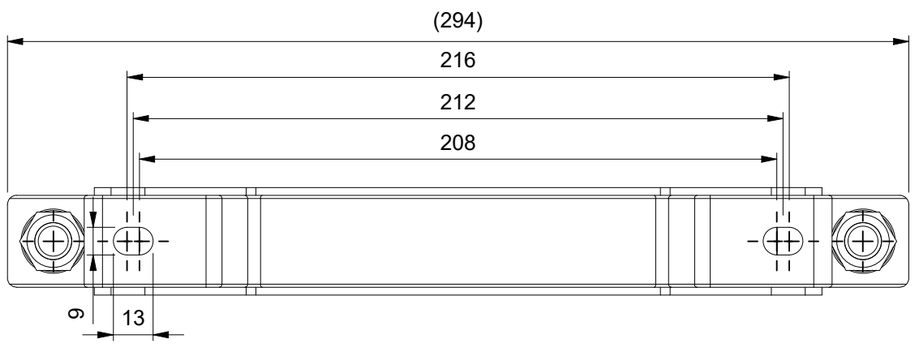

Item	Qty	PART NUMBER	Description	STOCK NUMBER	Material	Sum of Length
1	1	CB-ACCUT2W1215-W1	Lower clamp part	XPLAT30X3	DC01 C390	400 mm
2	1	CT-ACCUT2W1215-W1	Upper clamp part	XPLAT30X3	DC01 C390	400 mm
3	1	K-ACCUT2W1215-W1	Console part	XPLAT30X3	DC01 C390	423 mm
4	4	OAA-21017135M-01	Rivet Bushing Ø21	XPROPACCUW1	11SMnPb30 / 1.0718	
5	2	OBA-12800088M-00	DIN 933 - M12x80 Sk 8.8	XBOUTM12x80	Steel, Galvanized	
6	2	OMA-12000080M-00	DIN 934 - M12 Sk.8	XMOERM12	Steel, Galvanized	
7	1	RB-ACCUT2W1215	Lower rubber part	XRUBBER30X3	EPDM Shore 65°±5°	320 mm
8	1	RT-ACCUT2W1215-30x3	Upper rubber part	XRUBBER30X3	EPDM Shore 65°±5°	320 mm

General Tolerances: according to: DIN 2768-vL

SURFACE TREATMENT AND OR PROTECTION:
Zinc plated
DIN50961: Fe/Zn 8-12 µm

Commercial Drawing

Material: ACCUT2W1215

Mass: 1,219 kg

Filename: ACCUT2W1215.dwg

Sheet: 1 / 2

Third angle projection:

Part number:
ACCUT2W1215

Drawn by: G. Kardos

Creation date: 31/01/2012

Checked by: M. Wiersma

Checked date: 01/02/2012

Scale 1 : 2

Units: mm

Status: Released

Description:
MPC Industries Accumulator clamp type 4, 215-225 mm, W1

Revision: A

Format: A3

MPC Industries B. V. Badweg 38 8401 BL Gorredijk Postbus 225 8400 AE Gorredijk. Tel.: . 0513 465477 Fax:. 0513 465736