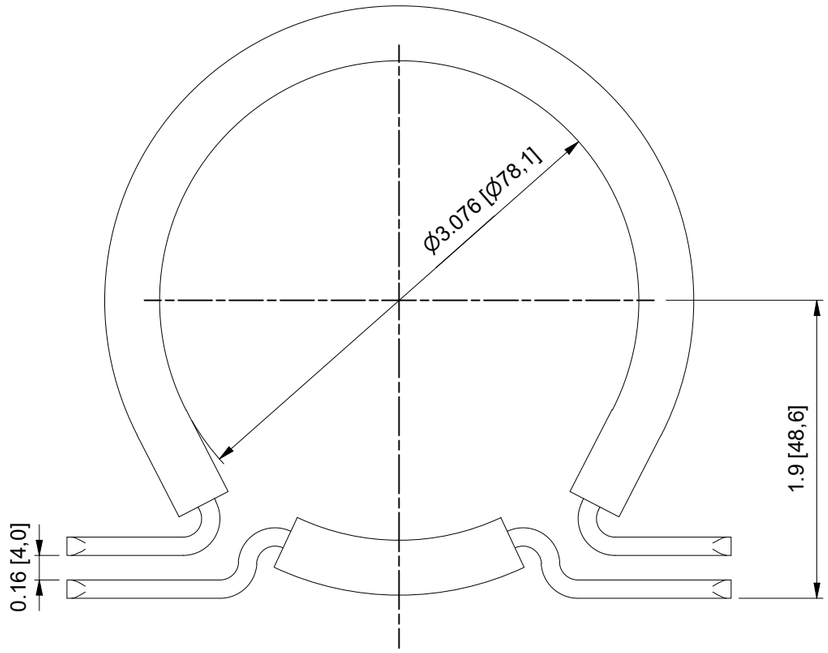

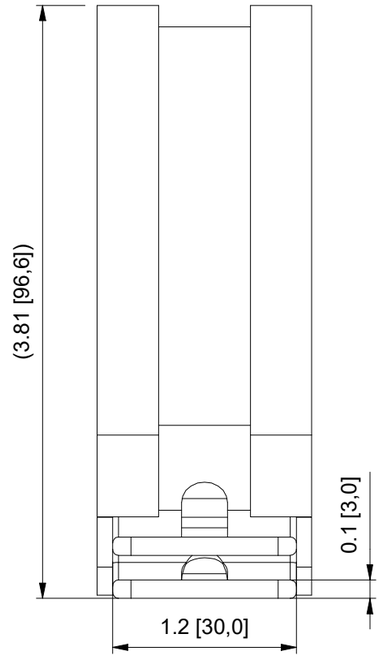

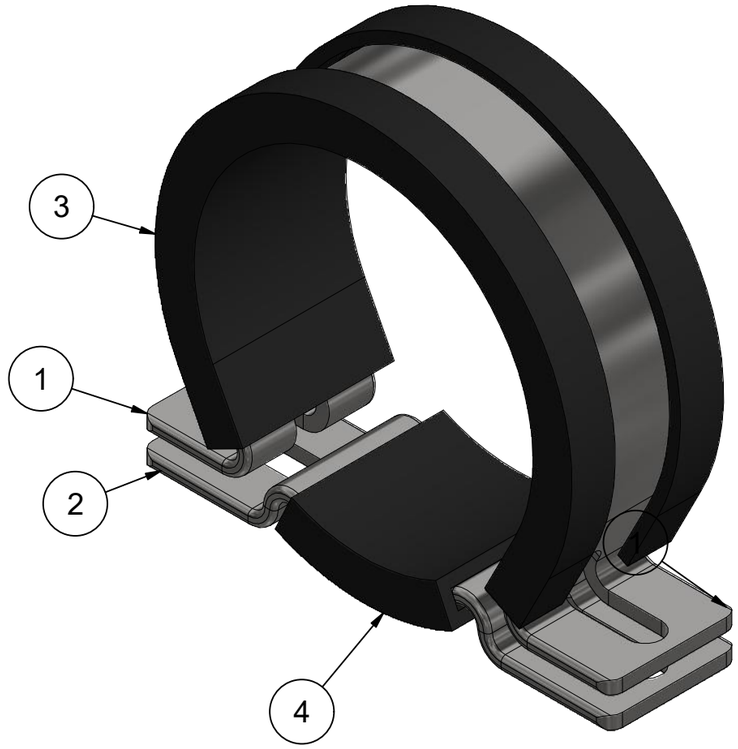

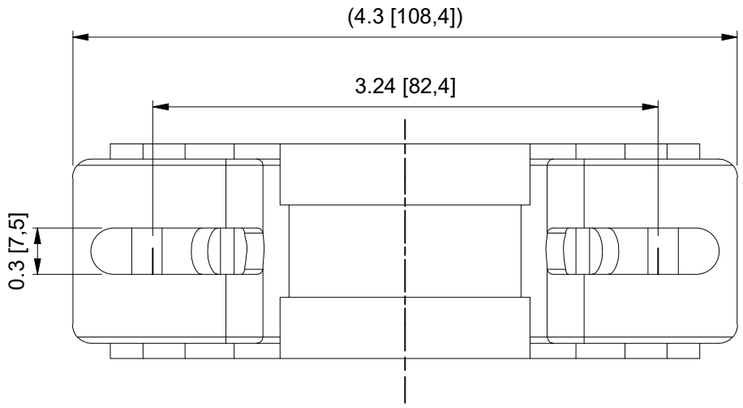

Item	Qty	PART NUMBER	Description	STOCK NUMBER	Material	Length
1	1	AIE-30030000I-01	Clamp Saddle	XPLAT30X3RVS316	AISI 316	262.3 mm
2	1	AIE-30030000I-02	Bracket Part	XPLAT30X3RVS316	AISI 316	117.6 mm
3	1	AIE-30030000I-03	EPDM Box Profile	XRUBBER30X3	EPDM Shore 65°±5°	206 mm
4	1	AIE-30030000I-04	EPDM Box profile	XRUBBER30X3	EPDM Shore 65°±5°	37.7 mm

General Tolerances: according to: ISO 2768-vL

SURFACE TREATMENT AND OR PROTECTION:

Commercial Drawing

Material: ' AIE-30030000I-00

Mass: 0,284 kg

Filename: AIE-30030000I-00.dwg

Sheet: 1 / 2

Third angle projection:

Part number:
AIE-30030000I-00

Drawn by:	M. Wiersma	Creation date:	17/09/2018
Checked by:	C.P. Dijkstra	Checked date:	05/10/2018
Scale:	1 : 1	Units:	Inch [mm]
Status:	Released		

Description:
Clamp Bracket Ø 3.076 inch.
Stainless steel

Revision: A

Format: A3

Rev.	Date	Description	DESIGNER
A	18-9-2018	Changed mounting holes from original design into ovale ones. hole fit for 1/4-20 bolt	M. Wiersma

Revision history